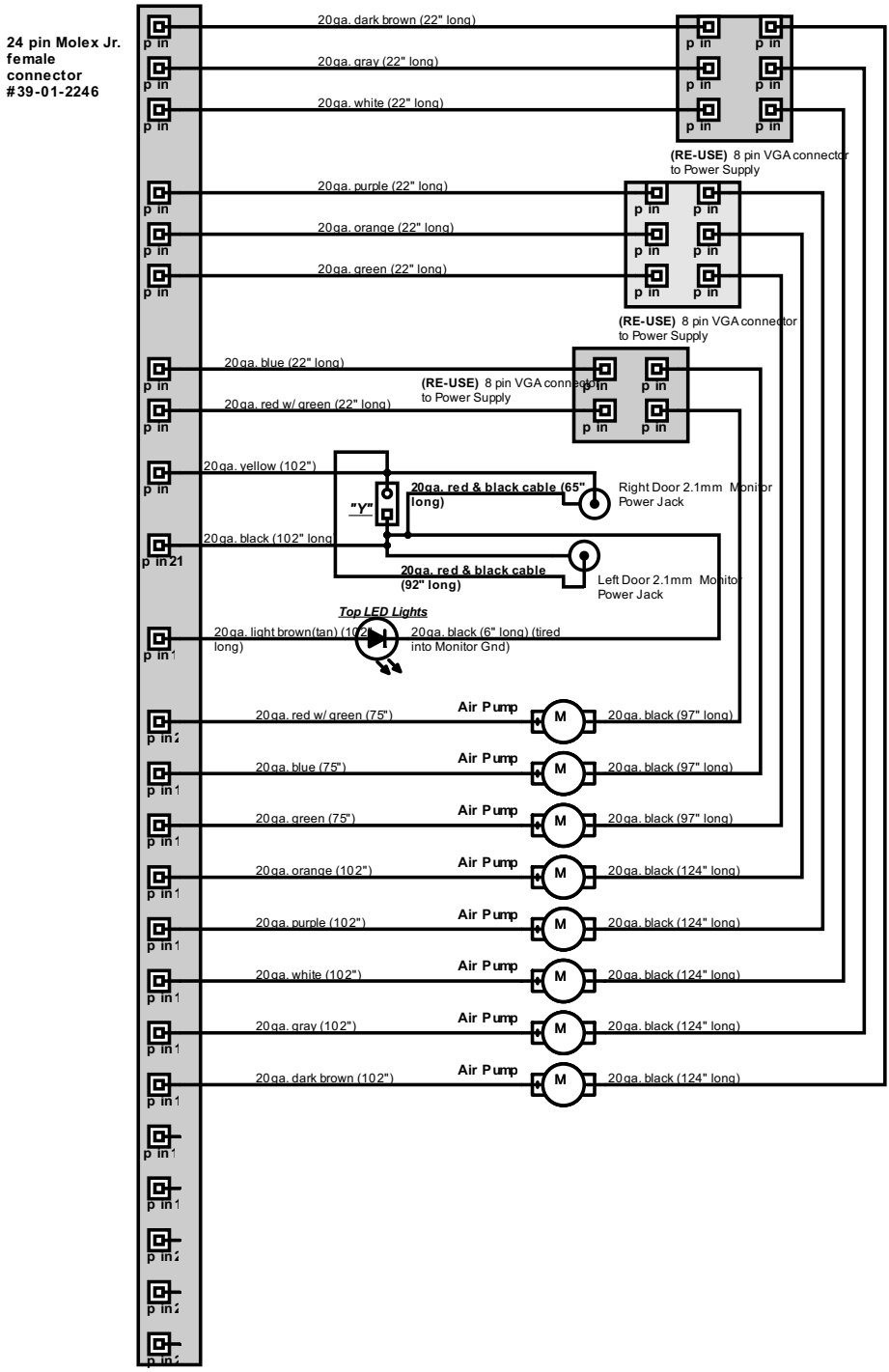24 pin Main Wiring Distribution Harness